Cross-Core Covert Channel for RISC-V

Mahreen Khan, Maria Mushtaq, Renaud Pacalet, Ludovic Apvrille

Telecom Paris

31 March 2026

Why Security Matters?

Secure Software: Can Data Still Be Leaked?

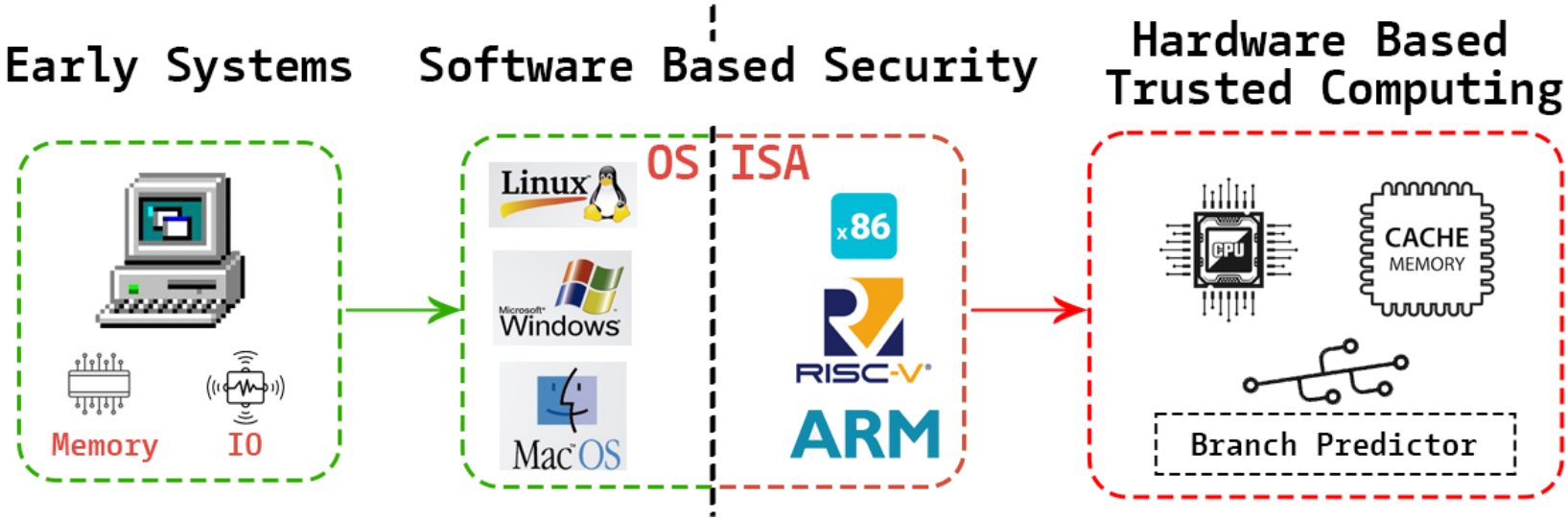

- Consider CPU as a black box
- Assume no bugs in software

Can data still be leaked?

Yes - Through hardware vulnerabilities and side channel attacks

Side-Channel Attacks

Side-Channel Attacks: Major Security Concern

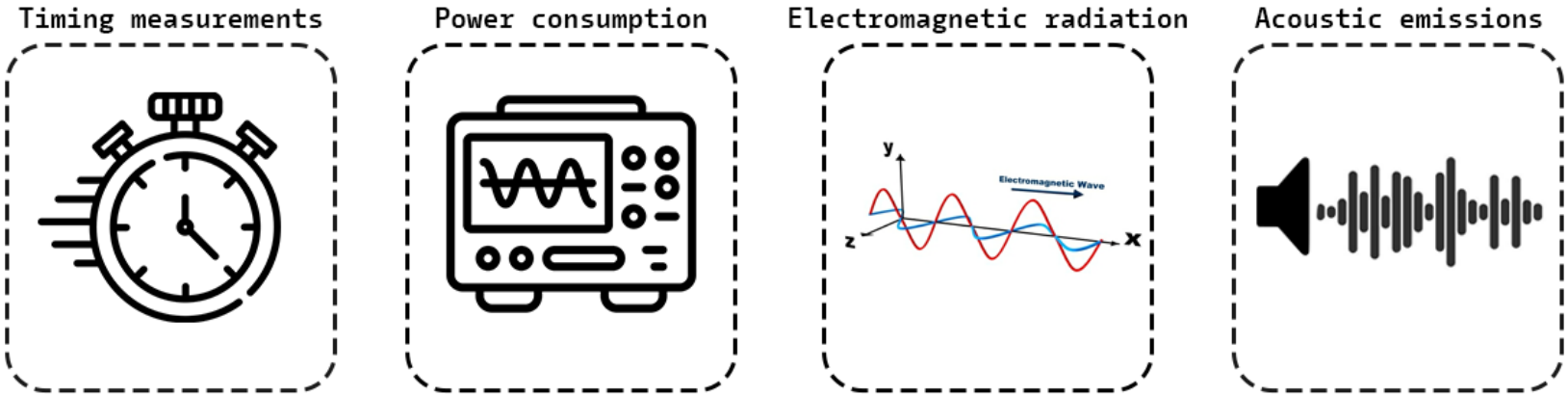

Focus for my research:

Microarchitectural timing side-channel attacks &
Transient execution attacks

Adds Extra States and Behavior Beyond the ISA

Why?

To optimize performance

Behavior

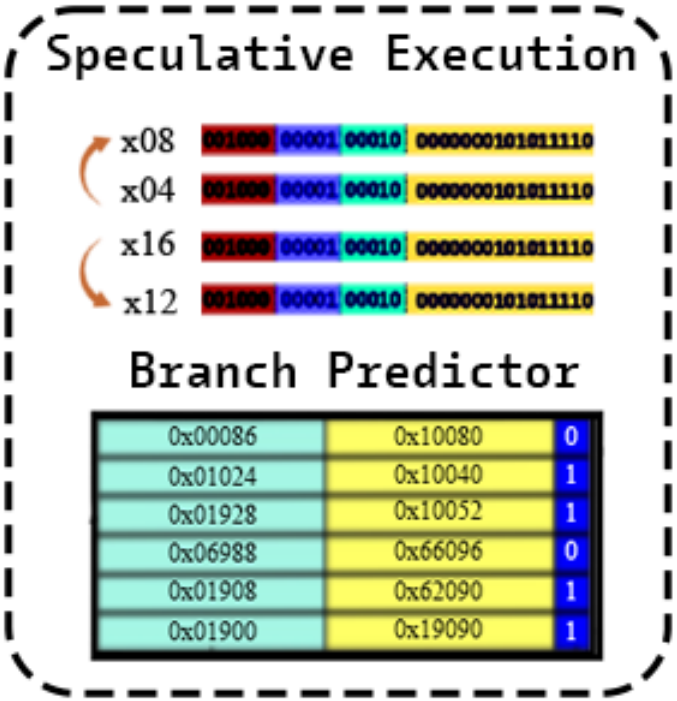

States

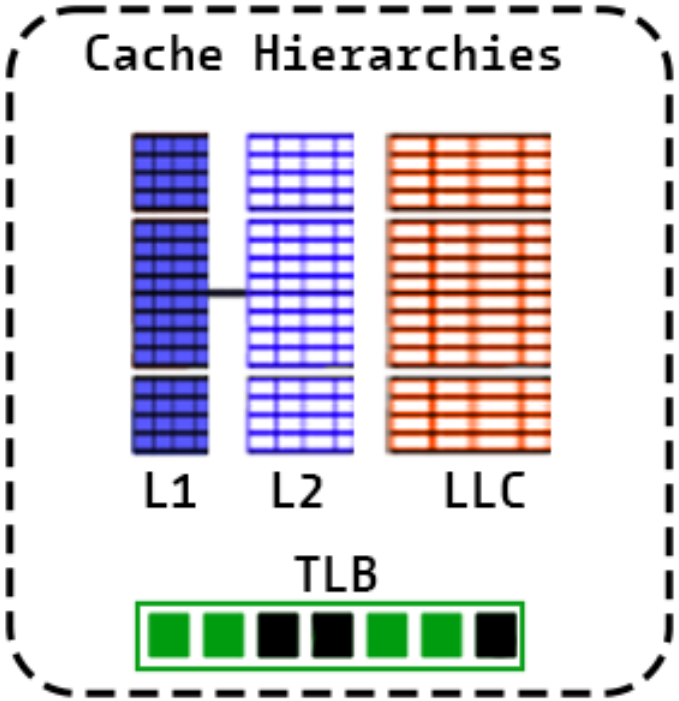

Cache Optimization

Benefits:

- Reduces memory latency (10-100x shorter than DRAM)

Risks:

- Reveals cryptographic secrets

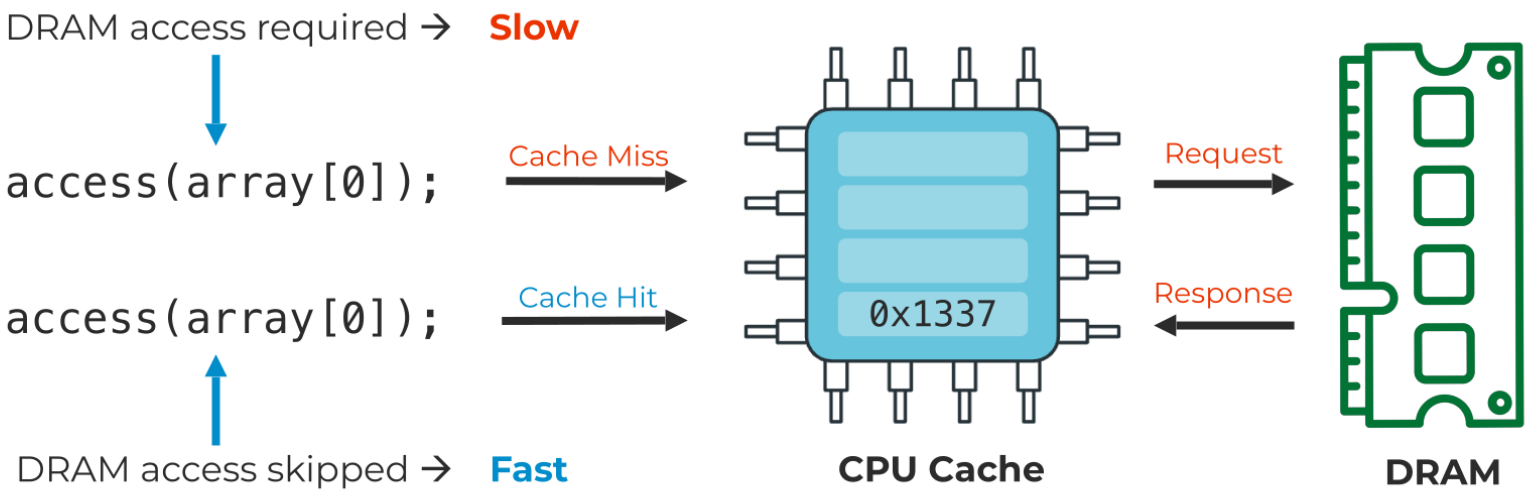

Famous Attack: Flush+Reload

Speculative Execution and Branch Prediction

Benefits:

- Improves pipeline utilization

Risks:

- Out of bound memory access

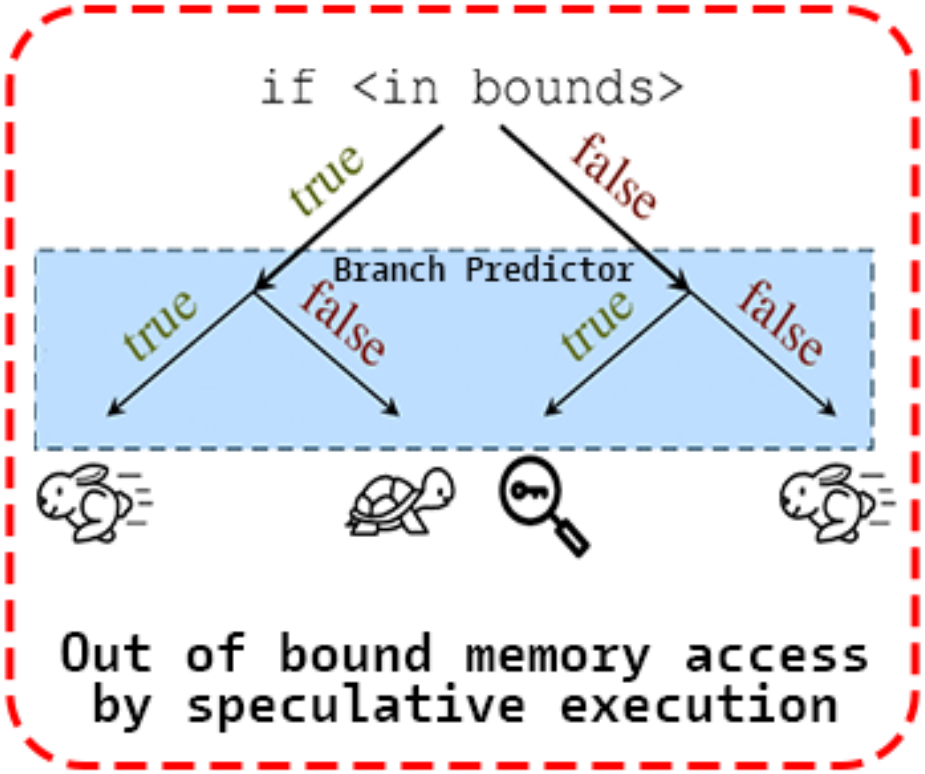

Famous attack: Spectre-v1

RISC-V

Research focus on RISC-V security analysis

RISC-V vs x86 and ARM

Instruction Set Architectures

x86

Closed ISA

Most desktops, laptops & servers have an x86 (x86-64) processor from Intel or AMD.

ARM

Closed ISA

Android and iOS devices, & new Apple computers, have a processor based on ARM IP.

RISC-V

Open ISA

Anybody can design & sell a RISC-V processor without any constraints on their actions.

Why RISC-V Matters

62.4 billion RISC-V cores forecast by 2026

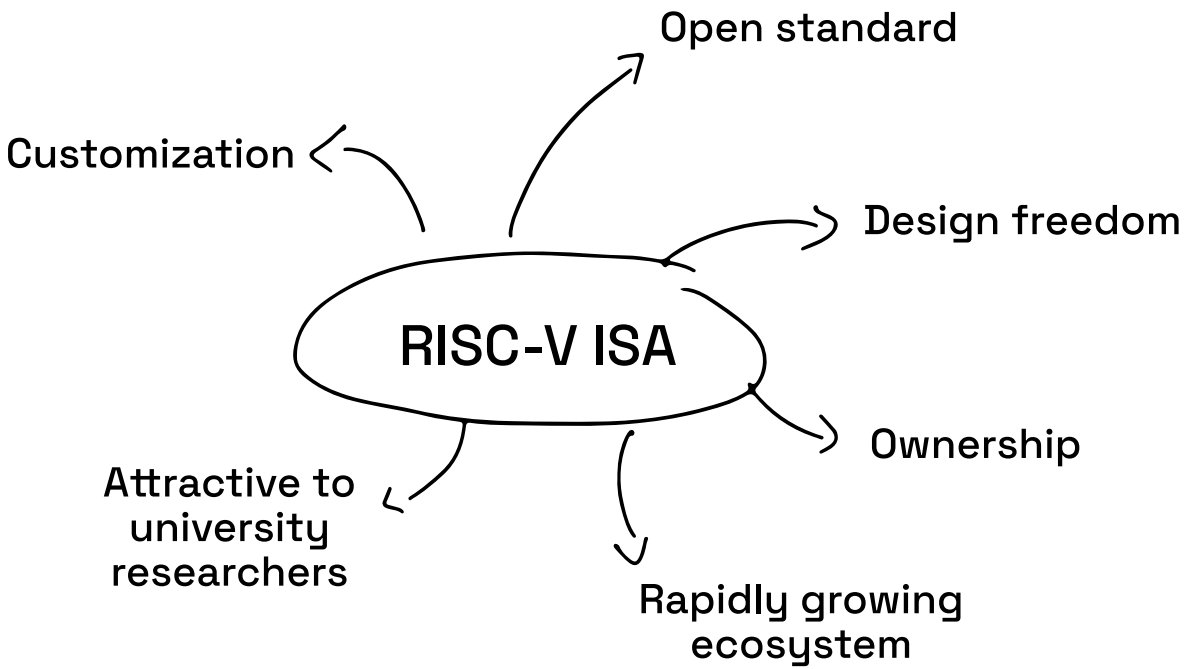

RISC-V: Security Gap

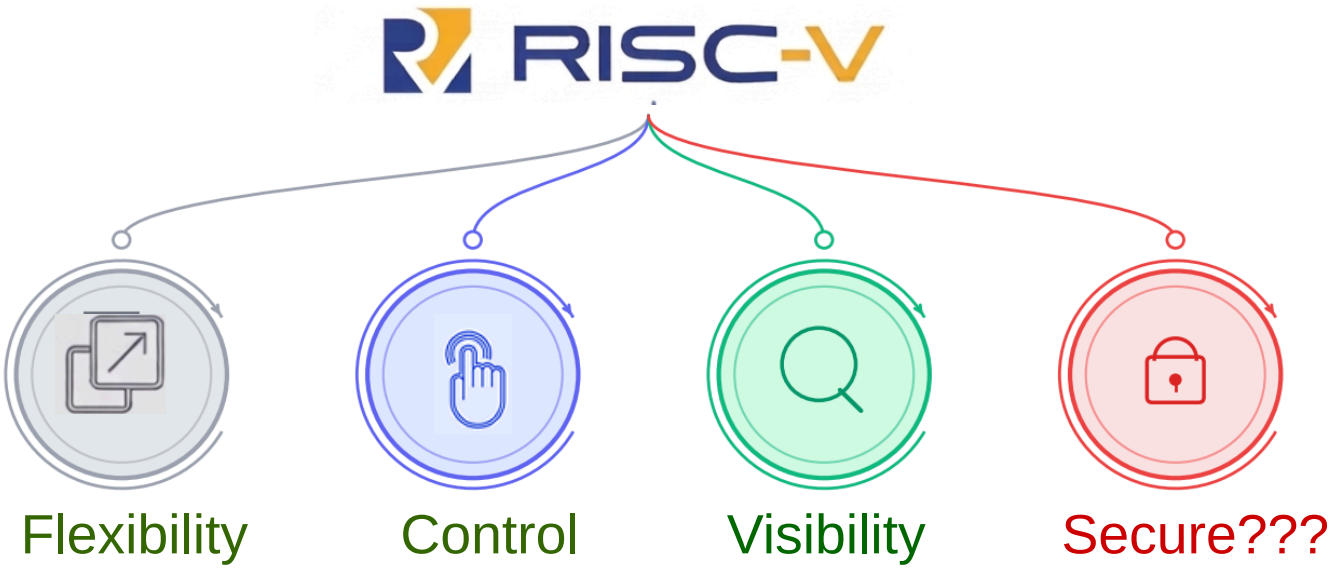

Security Gap:
A lot of work is done to understand Intel x86 and ARM vulnerabilities.

BUT what about RISC-V?

RISC-V Challenges: Critical Gap

- Less mature RISC-V security analysis
- No virtual platform for evaluation
- Custom extension security
- Verification complexity

Covert Channel Design

Cross-Core Covert Channel for RISC-V

What are Covert Channels?

- **Covert channel**: intentional communication between two colluding processes that bypasses system isolation policies.

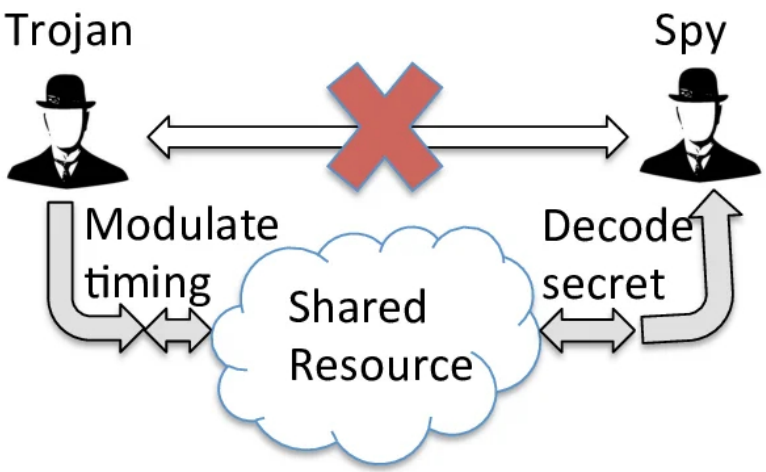

Why not direct communication?

Direct communication (shared memory) would leave traces in system logs and audit records (easily detected by security tools).

Threat Model

- Two unprivileged processes: **Trojan** (sender) and **Spy** (receiver)
- Same RISC-V system (same or different cores)
- Both can:
  - Read `rdcycle` for timing
  - Execute cache management instructions

Attacker Goal

Reliably transmit information via cache/prefetcher channels while remaining undetectable by standard monitoring.

Channel Protocol

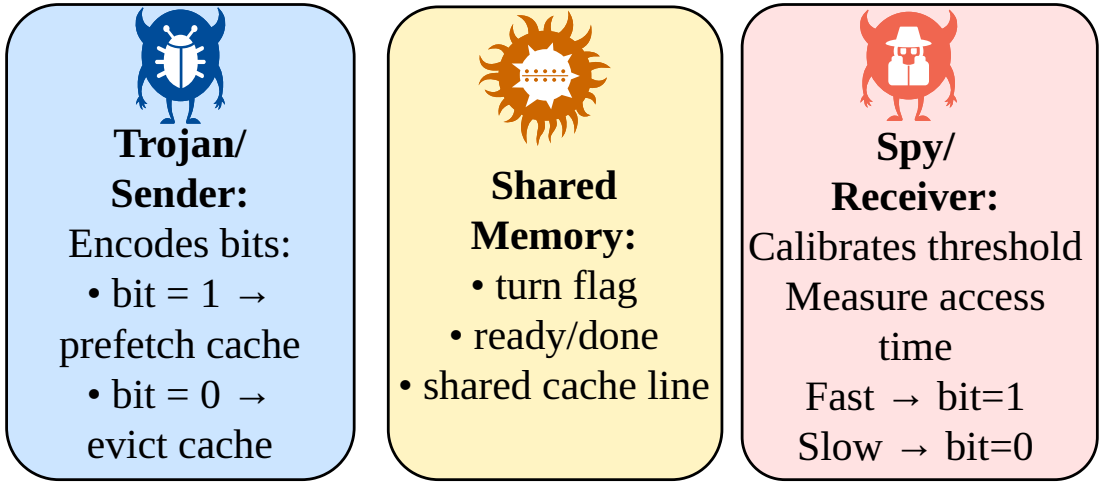

Trojan modifies cache state of a shared line; Spy measures latency.
Synchronization via atomic flags.

1. Spy calibrates threshold (cached vs evicted latency)
2. Spy signals ready; Trojan sends message length
3. For each bit:
   - Bit 1: prefetch shared line → cached
   - Bit 0: flush shared line → evicted
   - Spy measures access latency, compares to threshold

Simulation and Hardware Evaluation

Why Both Simulation and Hardware?

Simulation

- Reproducible
- Full visibility into microarchitecture (cache misses, pipeline stalls)
- No physical hardware required
- Ideal for debugging and initial validation

Hardware

- Real-world conditions
- Validates that attack works on actual silicon
- Tests vendor-specific instructions
- Demonstrates practical threat

Testing on both gives confidence in both correctness and practicality.

Simulated Environment: Gem5

Tool Comparison

- ✓ gem5: Full-system, cycle-accurate but moderate speed
- QEMU: Fast emulation but less accurate
- Spike: ISA simulator but no timing accuracy
- Verilog Simulators: Highly accurate but very slow.

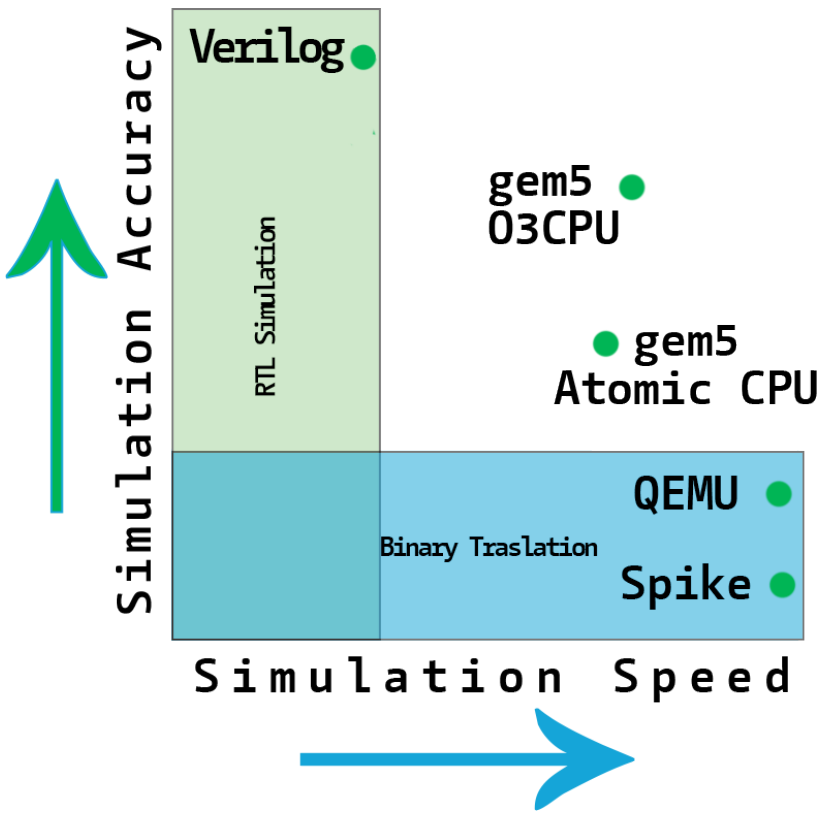

Hardware Platform: Beagle-V Ahead Board

T-Head C910 Processor

- Availability
- Quad-core 64-bit RISC-V
- Out-of-order
- Custom cache instructions

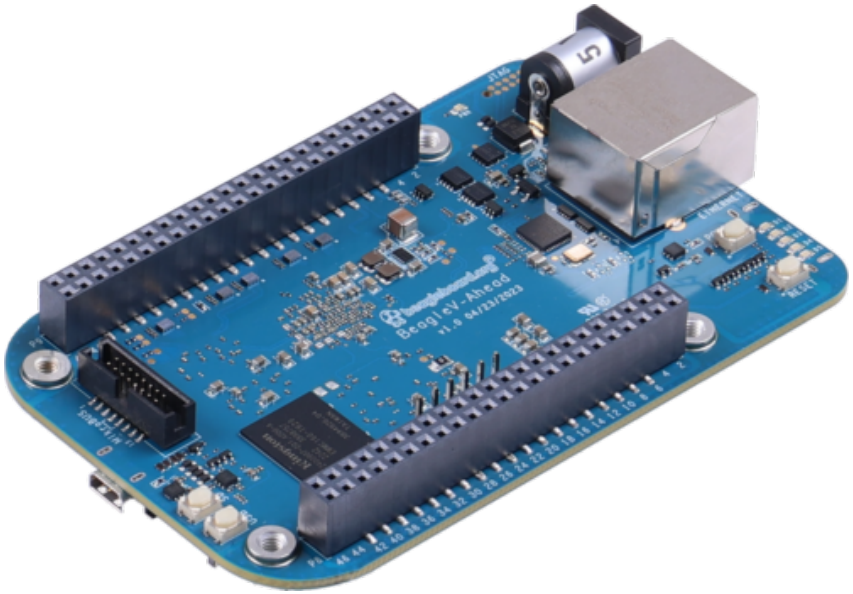

RISC-V Cache Management Instructions

Standard extensions (Gem5 simulations)

- `Zicbom`: Cache Block Management – `cbo.flush`, `cbo.clean`, `cbo.inval`
- `Zicbop`: Cache Block Prefetch – `prefetch.r`, `prefetch.w`, `prefetch.i`

Vendor-specific (T-Head C910: Beagle-V Ahead Board)

- `DCACHE.CIVA` (0x278800b) – data cache invalidate by virtual address
- No dedicated prefetch; use load to trigger hardware prefetcher

Reliability

- **Bit error rate:** typically 0% over hundreds of bytes on both platforms.
- **Bandwidth:** 100–1000 bps.
- **Portability:** same protocol runs on both without modification; calibration adapts automatically.

Future Work and Conclusion

Future Work

- **Wide Attack Coverage**
  - Support for cache attacks, speculative execution, branch prediction, and TLB-based side channels
- **Covert Channel Enhancements**
  - Forward error correction, higher bandwidth, more platforms
- **ML-Based Detection Techniques**
  - Use gem5 statistics to train models for detecting attack patterns in execution traces
- **Countermeasure Evaluation**
  - Implement and test cache partitioning, randomized replacement etc.
  - Measure effectiveness and performance trade-offs

Conclusion

- RISC-V is rising as an open and flexible ISA.
- Microarchitectural security matters: leaks can expose sensitive data.
- Our cross-core covert channel uses prefetcher and cache state modulation, validated on gem5 and C910 hardware.

Code & Data:

Thank You!

mahreen.khan@telecom-paris.fr